INK Mosaic Large Accent Head - 3-1/2" Diameter (89mm)

INK Mosaic Articulating Arm Accent Light (For use with Mosaic 6" Pocket)

The Mosaic Family

The INK Mosaic Accent Heads are next generation and are solely designed to work with the Mosaic pocket housing. They are the latest addition to the Mosaic Family of linear configurable concealed track pockets and accent lights, featuring Bluetooth controlled variable color tuning and dynamic beam shaping optics designed specifically for the lighting professional. The fixtures are magnetically mounted in the pocket behind the knife edge and are powered by a proprietary 48 volt power supply/driver following DALI-2 protocol. These accent lights can be located anywhere within the pocket and are a powerful new tool in the Mosaic family. They feature an articulating arm with with three pivot points precisely locating the accent lights where needed for focusing. The head can pan and tilt from a single pivot point located at the head, making aiming quick and simple.

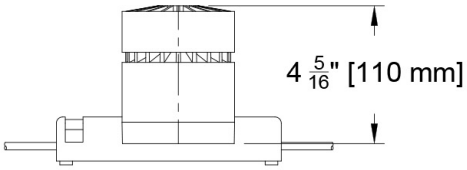

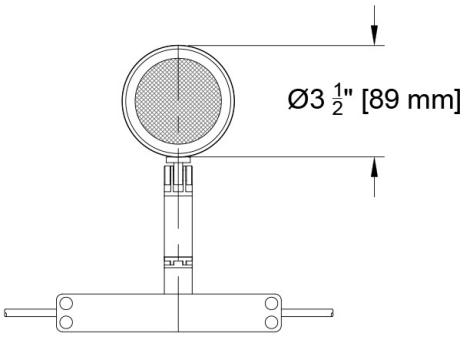

PROJECT: | TYPE:

SPECIFIER: | DATE:

Key Points (INKMSC-H-L)

Housing

- Accent Head for use in Mosaic 6" Pocket.
- Die-cast aluminum housing with twist off bezel assembly for access to accessories.
- Available in Black or White painted finish.
- Adjustable 360° degree rotation and 180° degree pan and tilt on a cantilevered arm with 5 points of rotational adjustment. Aiming hardware is lockable.
- Flexible mounting with magnetic base secured to knife edge internal tray.

Source / Optics

- 20 watt tunable white sources available in 1800-4000K CCT and 2700-6500K CCT ranges.
- 17 watt dynamic RGBW source available. Consult factory.
- Up to 1490 delivered lumens in tunable white.
- Bluetooth controlled dynamic beam shaping with versatile beamspread range of 10º to 50º.
- <3 MacAdams Ellipses (<3 SDCM) for tunable white.
- 94+ CRI, 76+ R9 accross all CCT's in tunable white.
- TITLE 24 Fixture supports CA Title 24 compliance meeting JA8 requirements
- Lifetime: L87B3>55,000 hours at 40ºC Ambient

Driver And Control

- 120 volt input for 48 volt power supplies featuring easy plug and play connections.
- Driver and Bluetooth interface integral to magnetic base.
- DALI-2 protocol and Bluetooth interface enables individual control of each fixture.

© 2026 Specialty Lighting Industries
These specifications are subject to change without notice.
Specialty Lighting Industries
1306 Doris Ave., Ocean, NJ 07712
Tel. 732.517.0800 | Fax 732.517.0971

Ordering Codes

PROJECT:

SPECIFIER:

DATE:

TYPE:

QUANTITY:

Ordering Code Example: INKMSC-H-L-

FIXTURE	MOUNTING	LUMENS / WATTS	CCT	BEAM	DRIVER / CONTROL	HEAD FINISH	LENS ACCESSORIES	ACCESSORIES
INKMSC-H-L								
INK Mosaic Accent Head - Large	MM Mosaic Magnetic Mount	Ink™ Tunable White 90+CRI, 70+R9 1800-400K or 2700-6500K^ RGBW 17W 650Lm^ 90+CRI, 60+R9 Dynamic Color Changing * Based on 20° Beam & 2765 CCT ^ Consult factory	Ink™ 1840 1800-4000K Tunable White 2765 2700-6500K Tunable White Tunable RGBW 1200-8000K Dynamic Color Changing	Ink™ 10-50 INK Dynamic Beam Shaping Range 10 - 50 degrees	Ink™ INKCA 0.1%, (120-277V) DALI-2 based, Casambi controlled driver/48 volt power supply - consult factory for wattages Note: Power supplies can control multiple fixtures. DALI-2 allows individual control of fixtures. Consult factory.	B Black Paint W White Note: Aperture Trim Bezel is black in all finishes.	MSC4-XB 4" Mosaic Cross Baffle	BABA BABA Compliant BABA Products

© 2026 Specialty Lighting Industries

Specialty Lighting Industries
1306 Doris Ave., Ocean, NJ 07712
Tel. 732.517.0800 | Fax 732.517.0971

Mounting Options

Large Accent Head | Magnetic Mount (MM)

(INKMSC-H-L-MM-)

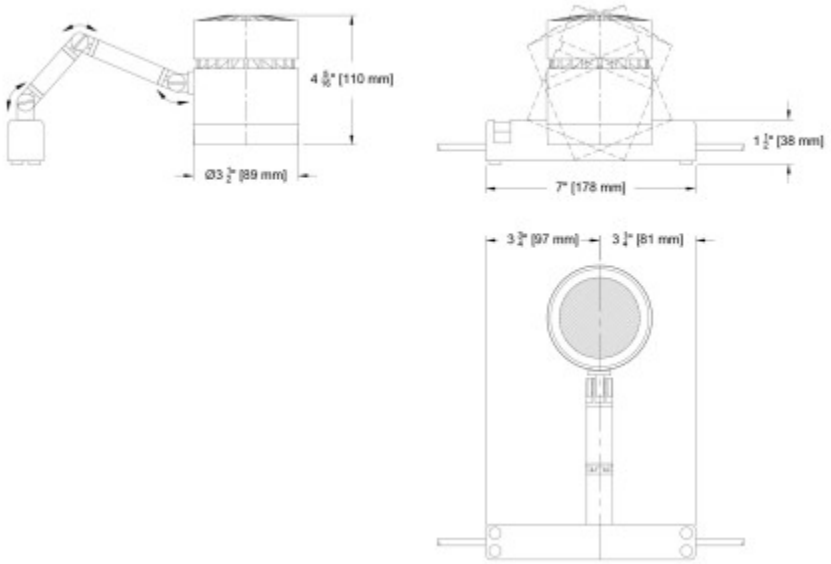

© 2026 Specialty Lighting Industries
These specifications are subject to change without notice.
Specialty Lighting Industries
1306 Doris Ave., Ocean, NJ 07712
Tel. 732.517.0800 | Fax 732.517.0971

Photometric Table

Photometric data available upon request. Consult factory. All data below are delivered lumens based on goniometer measurements of production representative product. All lumen values can vary +/- 10% from LED manufacturer rated nominal flux.

		10°				30°				50°			
Source	System watts (W)	Delivered Lumens (lm)	Lumens/ Watt	Peak CD	10% Field	Delivered Lumens (lm)	Lumens/ Watt	Peak CD	10% Field	Delivered Lumens (lm)	Lumens/ Watt	Peak CD	10% Field
Tunable White- 1840	21	Consult Factory for Photometric Data 732-517-0800											
Tunable White - 2765	21												
Dynamic RGBW	18												

© 2026 Specialty Lighting Industries

Specialty Lighting Industries
1306 Doris Ave., Ocean, NJ 07712
Tel. 732.517.0800 | Fax 732.517.0971

Color Data

All data below are delivered lumens. Color and flux information based on goniometer measurements of production representative product. All values can vary +/- 10% from LED manufacturer data range as listed on their datasheet.

Tunable White Source T20 - CCT 1840 (1800k to 4000k)

- <3 MacAdam Ellipse (<3 SDCM)
- 94 CRI average across all CCTs
- 76 R9 average across all CCTs
- Available in both wired or wireless control

INK	TUNABLE WHITE - 1800-4000K						
Color Temp	1800	2200	2500	2700	3000	3500	4000
System Watts	21	21	21	21	21	21	21
Delivered Lumens	1065	1217	1315	1380	1515	1604	1604
Luminaire Efficiency	51	58	63	66	72	76	76
Flux and Color data based on 20° measurement at 2700k. All other values are extroplated from actual and analytical tests							

Spectral Power Distributions at all listed CCTs available upon request

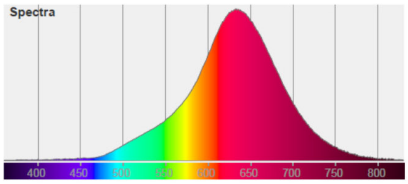

1800K

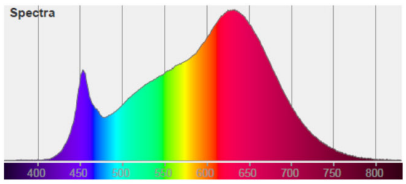

3000K

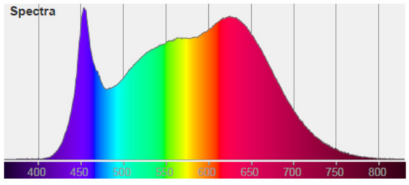

4000K

94 CRI | 76 R9 | 89 RF | 97 RG

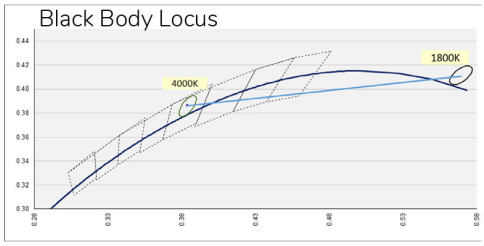

Tunable White Source T20 - CCT 2765 (2700k to 6500k)

- <3 MacAdam Ellipse (<3 SDCM)
- 94 CRI average across all CCTs
- 96 R9 average across all CCTs
- Available in both wired or wireless control

INK	TUNABLE WHITE - 2700-6500K								
Color Temp	2700	3000	3500	4000	4500	5000	5500	6000	6500
System Watts	21	21	21	21	21	21	21	21	21
Delivered Lumens	1401	1444	1490	1492	1490	1488	1486	1481	1499
Luminaire Efficiency	67	69	71	71	71	71	71	71	71
Flux and Color data based on 20° measurement at 4500k. All other values are extroplated from actual and analytical tests									

Spectral Power Distributions at all listed CCTs available upon request

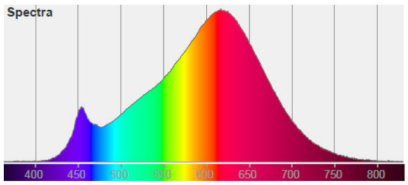

2700K

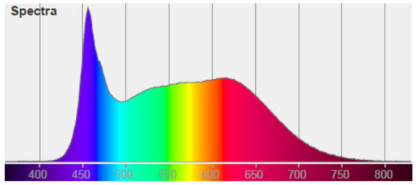

5000K

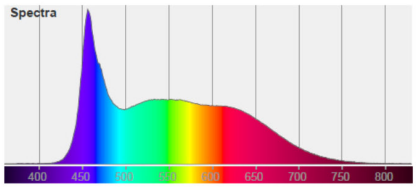

6500K

96 CRI | 76 R9 | 91 RF | 99 RG

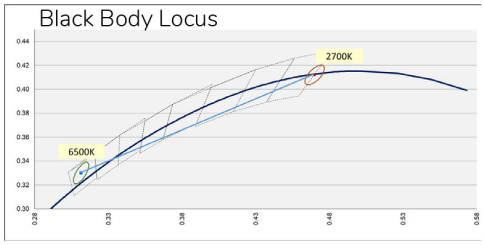

© 2026 Specialty Lighting Industries
These specifications are subject to change without notice.
Specialty Lighting Industries
1306 Doris Ave., Ocean, NJ 07712
Tel. 732.517.0800 | Fax 732.517.0971